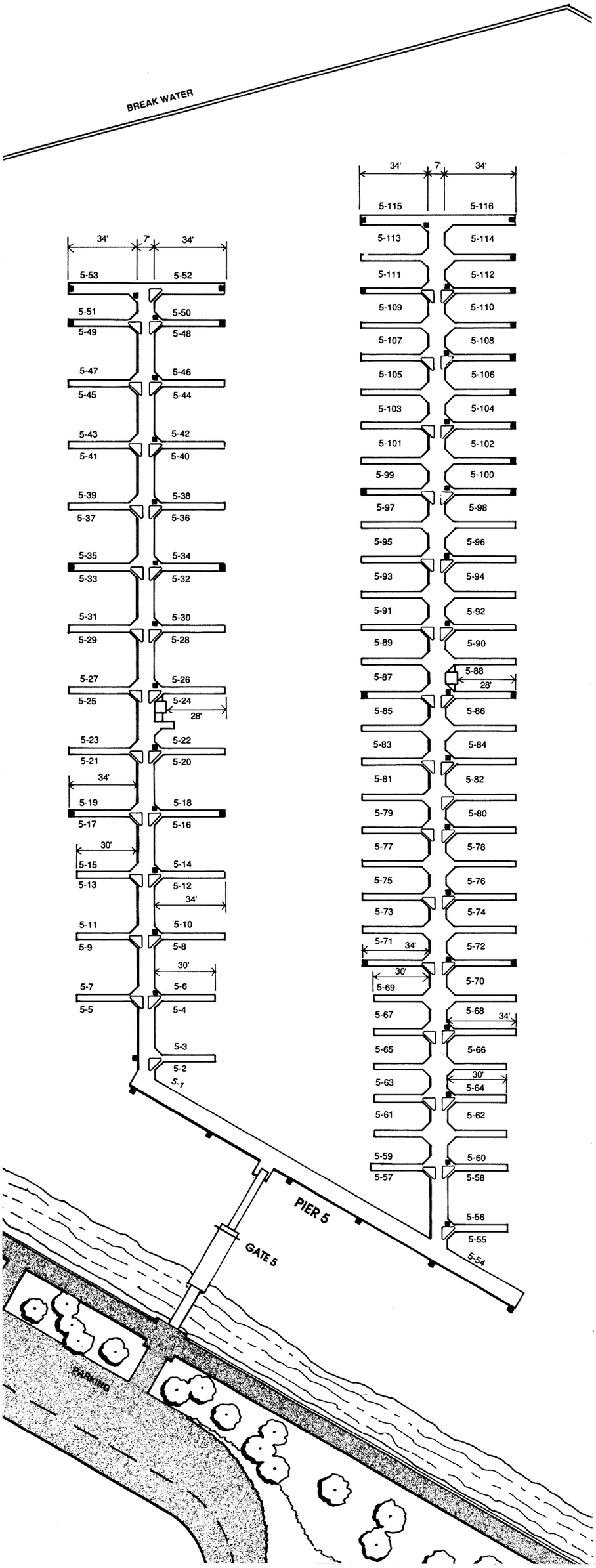
BREAK WATER
34'
7'
34'
5-53
5-52
5-51
5-50
5-49
5-48
5-47
5-46
5-45
5-44
5-43
5-42
5-41
5-40
5-39
5-38
5-37
5-36
5-35
5-34
5-33
5-32
5-31
5-30
5-29
5-28
5-27
5-26
5-25
5-24
28'
5-23
5-22
5-21
5-20
34'
5-19
5-18
5-17
5-16
30'
5-15
5-14
5-13
5-12
34'
5-11
5-10
5-9
5-8
30'
5-7
5-6
5-5
5-4
5-3
5-2
5-1
34'
7'
34'
5-115
5-116
5-113
5-114
5-111
5-112
5-109
5-110
5-107
5-108
5-105
5-106
5-103
5-104
5-101
5-102
5-99
5-100
5-97
5-98
5-95
5-96
5-93
5-94
5-91
5-92
5-89
5-90
5-87
5-88
28'
5-85
5-86
5-83
5-84
5-81
5-82
5-79
5-80
5-77
5-78
5-75
5-76
5-73
5-74
5-71
34'
5-72
30'
5-69
5-70
5-67
5-68
34'
5-65
5-66
5-63
30'
5-64
5-61
5-62
5-59
5-60
5-57
5-58
5-56
5-55
5-54
PIER 5
GATE 5
PARKING